Service kit
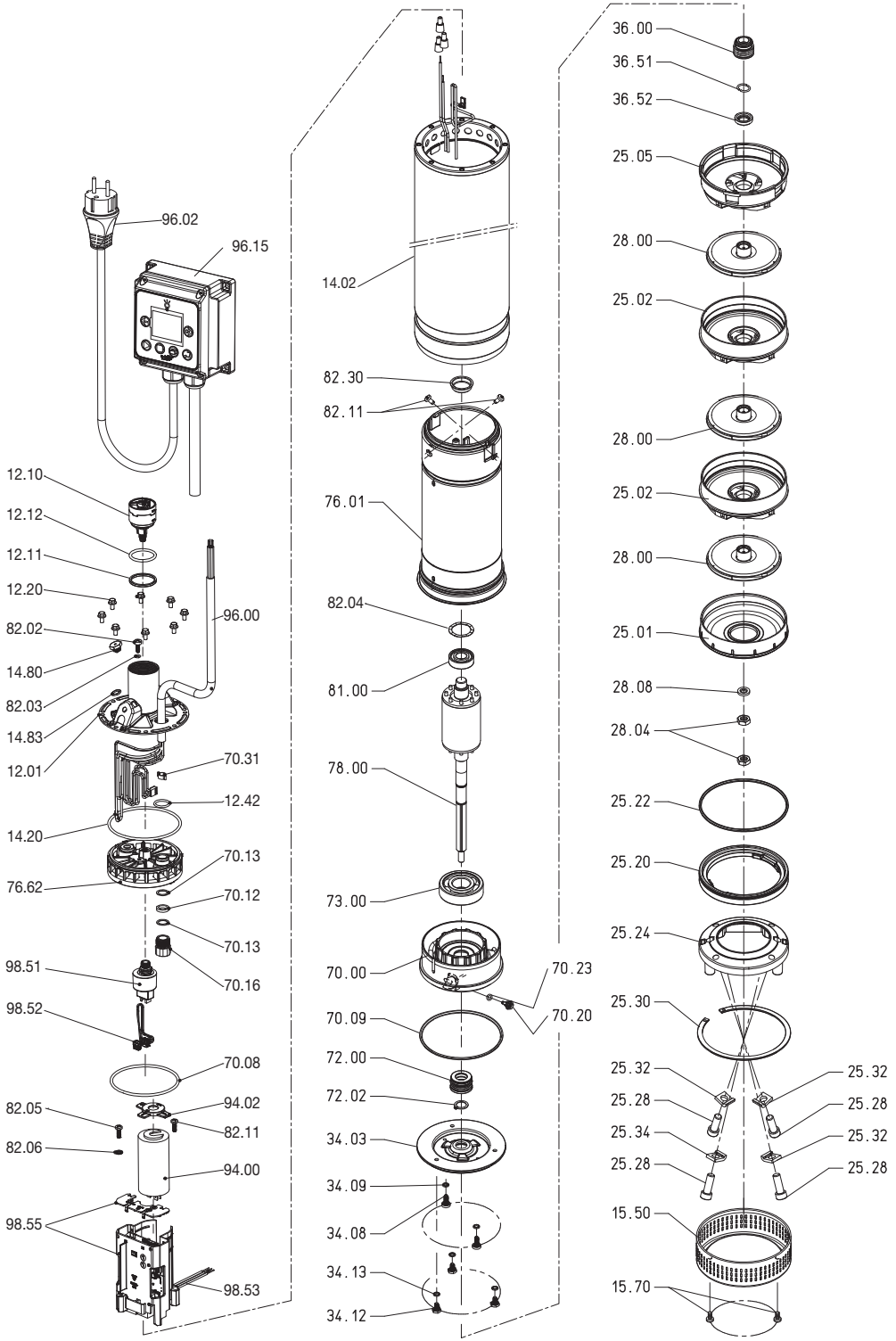
Pos	Qtà
12.10	1
12.42	1
14.20	1
28.04	1
34.09	2
34.13	3
36.00	1
70.08	1
70.09	1
70.12	1
70.23	3
70.31	1
72.00	1
72.02	1
73.00	1
76.01	1
81.00	1
94.00	1
96.00	1